CONSTRUCTION ASSESSMENT

JOB NUMBER	B23 - 1403
PROPERTY	10 Croft View Bishops Waltham Hampshire
CLIENT	Mr & Mrs Taylor 25 Abbotts Road Bishops Waltham Hampshire SO32 1RE
INSPECTED ON	**11th October 2023**
INSPECTED BY	**Oliver Culhane, BSc (Hons) MRICS**

Table of Contents

	A - General Information		**D - Services**
A1	Name and Address of Client	D1.1	Electricity
A2	Address of Property	D1.2	Gas
A3	Date of Inspection	D1.3	Water (Plumbing/Sanitary Fittings)
A4	Surveyor	D1.4	Heating
A5	Weather	D1.5	Other
A6	Roads	D2	Drainage
A7	Scope of Inspection	D3	The Site
		D3.1	Garage & Outbuildings
	B – Description	D3.2	Grounds
B1	Description		
B1.1	Type and Age		**E –Summary & Conclusions**
B1.2	Construction	E1	Summary & Recommendations
B1.3	Accommodation	E2	Signature
B1.4	Garage and Grounds		
B2	Location		**Appendices**
		(i)	Snagging Report
	C – Condition	(ii)	Inspection Photographs
C1	Movement	(iii)	Window / Door Reveal Assessment
C2	Timber Defects		
C3	Dampness		
C4	Insulation		
C5.1	Roof Coverings		
C5.2	Chimneys		
C5.3	Rainwater Disposal		
C5.4	Main Walls		
C5.5	External Joinery		
C5.6	External Decoration		
C6	The Interior		
C6.1	Roof Space		
C6.2	Ceilings		
C6.3	Floors		
C6.4	Internal Walls & Partitions		
C6.5	Fireplaces, Flues, Chimney Breasts		
C6.6	Internal Joinery		
C6.7	Internal Decoration		
C6.8	Other		

A. GENERAL INFORMATION

A1 Name and Address of Client

Mr & Mrs Taylor
25 Abbotts Road
Bishops Waltham
Hampshire
SO32 1RE

A2 Address of Property

10 Croft View
Bishops Waltham
Hampshire

A3 Date of Inspection

11th October 2023

A4 Surveyor

Oliver Culhane, BSc (Hons) MRICS

A5 Weather

The weather at the time of our inspection was dry and clear.

A6 Roads

Croft View is a fully made-up roadway. It is not known if the road and footpath are adopted by the Local Highways Authority, or privately owned and therefore maintained by way of an estate-wide maintenance / service charge.

A7 Scope of Inspection

Our inspection of this property covered all those parts of the building that could be seen either from ground level externally or from the interior, including accessible roof spaces.

We also inspected single storey roofs etc. where these were accessible from the short ladders, we are able to carry.

Binoculars were used to examine roof slopes etc. externally, and a dampness test meter was used internally.

Walls, floors, ceilings and window / door reveals were checked and assessed for trueness in the vertical and horizontal planes, using a combination of vertical / horizontal laser alignment equipment and metal T-squares with measurement gauges. External levels have also been assessed by way of a tripod mounted theodolite and staff.

Many parts of a building such as foundations and sub-floor areas are concealed during construction, and we do not disturb these. It follows, for practical reasons, that we have not inspected woodwork or other parts of the structure that are covered, unexposed or inaccessible, and we are, therefore unable to report that any such part of the property is free from defect.

Similarly, we cannot establish the extent to which the property has had wall cavity insulation provided, and we may not be able to comment on the type or suitability of the insulation material without opening-up works.

No inspection was possible of the cavity wall ties. Their presence and adequacy in number cannot be determined without opening up the external walls. We do not consider that the present general evidence justifies further investigation.

Where a house has extensive floor coverings, this again limits the inspection possible, particularly of floor surfaces. We did take random check readings with our survey equipment as far as obstructions would allow.

As far as the service installations (gas, electricity, hot and cold water, space heating and drainage) are concerned, our inspection was a limited superficial one and in the absence of specific tests we cannot give any warranty as to their condition, design or efficiency. The suitability of the main supplies and acceptability of the installations connected to them is something on which the gas, water and electricity authorities have the final word.

Underground pipes from rainwater downpipes or gullies were not traced or tested.

Calculations of the load bearing capacity of floors, walls and structural timber / steel frameworks have not been carried out and we can give no opinion as to their strength or suitability for your purposes.

B. DESCRIPTION

B1 Description

B1.1 Type and Age

The property under report comprises a two-storey detached house with an attached double garage, built by Crest Nicholson and completed October 2023. The property is understood to be the subject of a 10-year NHBC warranty.

B1.2 Construction

The property is of traditional construction for type, comprising external walls of cavity masonry construction and finished externally in a combination of facing brickwork and cement render. The main roof is pitched and tiled.

Internally, the ground floor is of suspended concrete construction, with the first floor of suspended timber joist construction. Internal walls are a mixture of either solid masonry or timber studwork construction as per constructional drawings provided. Internal walls are 'dot and dab' plasterboard on masonry walls with screw fixtures to timber studs.

B1.3 Accommodation

Ground Floor
Entrance hallway, WC, kitchen/dining room, utility room, reception room, study and store.

First Floor
Landing, bedroom 1 with en-suite, bedroom 2 with en-suite, bedroom 3, bedroom 4, airing cupboard and family bathroom.

B1.4 Garage and Grounds

The property has an attached double garage, with additional off-road parking provided on the driveway to the front. The house is set towards the rear of the site and orientated to face south-east. There are open style front gardens which return onto the left side, with the principal garden set to the rear of the house, which is largely lawned, with an area of paved terracing adjacent to the rear patio doors.

B2 Location

The property is located on a modern residential housing development constructed by Crest Nicholson, in an established residential area on the western outskirts of Bishops Waltham town.

A range of local amenities and facilities are readily to hand, together with good local transport links.

B3 Circumstances of Inspection

The property was vacant and unfurnished, although a range of fitted floor coverings were provided to areas of the property which prevented a detailed inspection of some floor surfaces.

Our inspection of the roof void was limited owing to lining felt and insulation material which could not be readily removed. Refer to **Section C6.1.**

The external inspection was carried out from within the confines of the property and from adjacent public highways or rights of way.

It was not raining at the time of our inspection. As such, we were unable to observe the rainwater goods in use and can offer no assurances as to their operational effectiveness.

C. CONDITION

C1 Movement

As advised in the introduction to this report, the property is newly constructed. As such, without the benefit of 'as built' drawings or invasive site investigation, it is assumed that the foundations to this property were designed by a consulting structural engineer covered under a professional indemnity insurance policy, and have been constructed in accordance with local ground conditions, and in full consideration of the requirements of the Building Regulations / NHBC standards at the relevant time of construction.

From the extent of our inspection, there is no evidence to suggest the property has been adversely affected by problems which could be attributed to adverse ground movement or foundation failure to date.

You should insure the property under an "all risks" policy. This would mean that if future problems with adverse ground movement or foundation failure were ever encountered, these would be classed as fully insured perils subject to the payment of any policy excess.

The site topography falls steadily from the rear boundary towards the front of the property.

Confirmation from your proposed building insurers regarding the current and future insurance status of the property is particularly important, as we can only advise upon the current condition of the property. We cannot comment upon future climatic changes and in particular the effects which periods of adverse weather could have upon the subsoil and the structural stability of the property.

External Inspection

Our inspection of the exterior of the property revealed no signs of significant movement. It appears that adequate lintel supports have been incorporated to support the masonry above the window and door openings. Where the lintels are enclosed within the wall construction, no detailed inspection could be carried out, but we do not consider there to be a need for further opening up or investigation at the present time.

Engineered movement joints have been incorporated into the masonry walls of the property, including to rendered areas. It is assumed these have been specifically designed by a consulting design engineer to accommodate movement in the walls. The vertical joints are arranged above DPC (damp proof course) level and extend the full height of the brickwork.

No evidence of adverse thermal movement / cracking was identified to the external walls, suggesting the joints are performing their designed function, albeit at an early stage in the life of the building and prior to occupation.

Internal Observations

Our inspection of the interior of the property revealed no signs of significant structural movement, although some signs of shrinkage in the form of minor hairline cracking was observed around margins of rooms, plasterboard joint lines etc. which is the result of normal expansion and contraction movement.

Whilst this is to be expected in a newly completed building, and not considered to have ongoing structural significance, effective cosmetic repair must be carried out and should be included in any snagging process prior to handover to the purchaser.

C2 Timber Defects

Having regard to the age of the property, pre-treated timber was used during the construction process. Accessible visible timbers within the property have been examined to establish whether they have been subjected to significant deterioration as a result of timber infestation, rot attack (wet rot or dry rot) or undue structural distress.

At this point we would stress that our inspection was restricted to visible timbers only. Timbers concealed during the construction process have not been inspected and we have not lifted floor coverings or removed items of household storage or furniture.

Our internal inspection of main structural joinery timbers revealed no signs of significant rot, decay or attack by wood boring insect.

C3 Dampness

Random probes with a moisture meter have been taken at regular intervals throughout the property and in particular in the following locations, furniture and floor coverings permitting:

1 At ground floor skirting level
2 Around door and window openings
3 Across chimney breasts
4 To solid ground floors
5 To ceilings fixed below sanitary fitments, water producing appliances and flat roofs.

Moisture meter readings taken internally revealed no signs of rising or penetrating dampness.

Damp Proof Course

A plastic damp proof course has been incorporated to the main external walls adjacent to external finished ground level. The purpose of the damp course is to prevent the natural ground moisture from rising up through the walls by capillary action.

For a damp-proof course to be completely effective, the dpc should be continuous and the natural ground level outside the main walls of a house should be at least 150mm below the level of the damp proof course (approximately two courses of brickwork).

The positioning and effective clearance to be afforded to a damp-proof course is covered in NHBC standards Section 5.1.19 – Damp proof course of the 2023 NHBC Standards where it is stated:

"Damp proof courses shall adequately resist moisture from reaching the inside of the building. Issues to be taken into account include:

a) positioning of DPCs
b) DPC materials."

"DPCs should be:

- *positioned a minimum of 150mm above external finished ground or paving level*
- *linked with any DPM*
- *of the correct width and fully bedded*
- *either welded or lapped by 100mm minimum*
- *impermeable."*

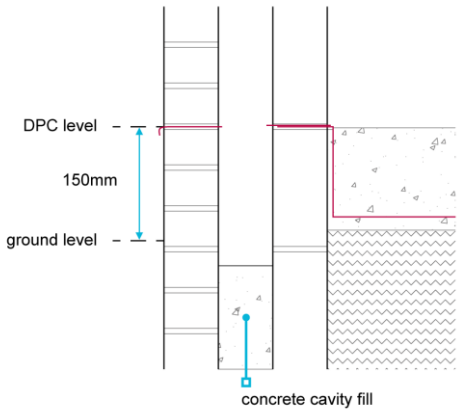

Source: NHBC Standards 2023 © NHBC

In respect of the subject property, a secondary damp proof course (DPC) has been installed two courses above the primary DPC. Generally, the distance between external

ground levels and the DPC is not of sufficient distance, however, the secondary DPC is set approximately 225mm from the external ground level.

It would be normal to only expect localised raising of external ground level adjacent to a ramped approach and level platform are provided adjacent to the principal entrance door to a property, where normally a secondary DPC is installed.

Trinity Rose Chartered Surveyors has been provided a copy of the topographical survey for the property. In this regard, please refer to commentary under sections D3.1 and D3.2 of this report, where a review of the designed levels has been undertaken when comparing the completed plot.

Sub-Floor Ventilation

As the property has suspended concrete ground floors, there is a requirement for sub-floor ventilation. This is achieved by the provision of 215x65mm airbricks incorporated to the external walls on the north-eastern and south-western elevations, providing cross-flow ventilation of the sub-floor void.

The current provision of airbricks (spaced at less than 2m centres) accords with both Building Regulations and NHBC standards.

Under Section 6.1.17 of the NHBC Standards 2023, it is a requirement for a cavity tray to be provided to direct any water that may enter the cavity to the outside. This is stated in Table 9 (see below) of the Standards – @Postions where DPC's and Cavity Trays are generally required'.

Location	Provision of DPCs and cavity trays
Base of walls, piers, etc.	A DPC should be provided a minimum 150mm above adjoining surfaces and linked with the DPM in solid floors.
Base of partitions built off oversite where there is no integral DPM	The DPC should be the full width of the partition.
Base of wall built off beam, slab, etc.	Detail to prevent entry of damp by driving rain.
Parapets	Beneath coping, and 150mm above adjoining roof surface to link with the roof upstand.
In cavity walls over openings, air bricks, etc.	A cavity tray should be provided to direct any water that enters the cavity to the outside. The cavity tray should fully protect the opening.
At the horizontal abutment of all roofs over enclosed areas and balconies to walls	A cavity tray should be provided 150mm above any adjoining roof or balcony surface. The tray should be lapped over any roof upstand or flashing to ensure water penetrating into the cavity does not enter the enclosed area.
At sloping abutments of all roofs over enclosed areas to cavity walls	Preformed stepped cavity trays should be provided above the roof surface and linked to the roof upstand or flashing to ensure any water penetrating into the cavity does not enter the enclosed area.
Doorsteps	A DPC should be provided behind a doorstep where it is higher than a wall DPC.
Sills	Where precast concrete or similar sills incorporate joints or are of a permeable material, a DPC should be provided beneath them for the full length and be turned up at the back and the end of the sill.
Jambs in cavity	The reveal should be protected throughout its width by a continuous DPC. The width of the DPC should be sufficient to be fixed to, or overlap, the frame and fully protect the reveal. For very severe exposure conditions, rebated reveal construction or a proprietary closer, suitable for the conditions, should be used.
Stone heads	Where precast concrete or similar stone heads incorporate joints or are made of a permeable material, a DPC should be provided beneath them for the full length and built into or fixed to the inner leaf wall.

Source: NHBC Standards 2023 © NHBC

On this basis, the construction detail appears to accord with the NHBC Standards, although we have not undertaken any invasive investigations within the cavity to verify the adequacy of installation or detailing.

Condensation

Condensation within a property is characterised by mould growth. This is often mistaken for dampness. However, mould will not grow on water from rising dampness. Mould growth generally results from ineffective air flow around the property and inconsistent levels of adequate insulation, ventilation and heating.

Our inspection of the interior of the property revealed no signs of significant condensation.

Mechanical extract fans provided to WC and bathroom areas were operational at the time of our visit and are correctly ducted to the external air.

Of course, at the time we inspected the property was not occupied, nor subject to normal cycles of heating and ventilation. To an extent, the control of condensation will also be determined by lifestyle and practices of the occupants.

C4 Insulation

Insulation is provided in properties generally in the following locations to retain heat wherever possible in the structure:

1. Between the ceiling joists in the roof space to prevent heat loss through the roof.
2. To any plumbing tanks and pipework within the roof void to prevent heat loss and freezing of the plumbing system.
3. Within wall cavities to prevent heat loss.
4. To external door and window openings, via the provision of double glazing or secondary glazing.
5. Within the ground floor structure, to prevent heat loss into the ground.

Being a new-build property, we have assumed that insulation has been incorporated within the main component parts of the building at the time of original construction to meet the requirements of Building Regulations and NHBC Standards. It must be appreciated that we have not undertaken any destructive opening-up of the external walls, floors etc. to determine the presence, type or thickness of any insulated that was enclosed in the course of construction.

It is, for example, assumed that wall cavities and the ground floor have been insulated, and that the standard of double glazing provided to windows and doors is of an appropriate level of thermal insulation.

Within the main roof void, adequate levels of insulating material were noted to have been incorporated between and across the top of ceiling joists.

It is assumed that the property will be handed over with an accurate EPC prepared by a Competent Person (registered assessor), and that 'as built' SAP calculations will be provided to confirm that the property meets the requirements of the Building Regulations.

C5 The Exterior

C5.1 Roof coverings

The main roof slopes have been viewed from ground level with binoculars. Inspection has been undertaken from within the confines of the site, boundaries and trees permitting and from communal locations i.e. roads and footpaths.

The main roofs are of pitched and cropped hip design, surfaced with plain tiles and featuring mechanically fixed verge clips to the gable features on all elevations, including the attached garage. The roof is finished with sectional 'dry vent' ridge tiles, mechanically fixed in position. At the intersections of roof slopes with the dormers, there are narrow gauge diagonal valley gutters with an inset sectional aluminium channel system.

The roof features a number of services such as in-line vent tiles, matching the roof system. On the rear roof slope, there is an array of photovoltaic panels which are designed to sit flush with the tiled surface. These are weathered at the perimeter using a proprietary flashing system.

From ground level inspection, the roof surfaces were noted to be level, even and well set, with no areas of significant damage or displacement identified to the tiles. Furthermore, all ridge tile units were noted to be in place and appear to be securely fitted and correctly aligned, based upon ground level inspection.

In accordance with good practice, oversized 'tile and a half' units have been incorporated adjacent to the verges and either side of the array of photovoltaic panels. The verge details have exposed metal clips to each course of tiles and were securely clipped and correctly aligned at the time of inspection. The edge of the verge tiling is finished with mortar pugging, which is presented in good condition and free from cracking or spalling.

From internal inspection within the roof void, no evidence of water penetration was identified around the undersides of the valley gutters, PV panels or in-line vent tiles suggesting the current weathering arrangements are satisfactory.

The NHBC Standards, in respect of proprietary valley gutter systems offer no specific guidance other than in Section 7.2.21, which states:

"Valleys, and the components used should:

- *Be in accordance with the design*
- *Have a finished pitch which complies with the minimum recommended for the roof*
- *Be fixed in accordance with the manufacturer's recommendations*
- *Small cut tiles should be avoided*
- *Have a lead flashing (minimum code 4) or other suitable saddle flashing, at the head of each valley*
- *Be formed using either preformed GRP, valley coursing tiles (plain tiles), valley trough tiles (interlocking), non-ferrous metal or a proprietary system to Technical Requirement R3."*

As the method of fixing is now enclosed, we are unable to comment on this in detail. However, from ground level inspection, the alignment of the valley gutter insets was consistent. No blockages were identified to the outer surfaces of the valley gutters, although these details imply an ongoing maintenance responsibility on the part of the property owner.

C5.2 Chimneys

None to the subject property.

C5.3 Rainwater Disposal

The rainwater goods are of uPVC specification, in a traditional 'half-round' profile, but oversized 'Deepflow' specification. The gutters in turn connect to a series of circular section downpipes which discharge underground into an arrangement of assumed soakaways or drains.

It was not raining at the time of our inspection, so we were unable to see the system in use. It is not possible to confirm that the rainwater installation is free from blockage, leakage etc., or that it is coping with long periods of heavy rainfall.

However, from ground level inspection, the gutters appeared to be aligned satisfactorily to fall and discharge rainwater towards the downpipes.

The gutters are fixed using plastic clips to the eaves boards, at approximately 750mm centres. The downpipes are secured to the walls using clips spaced every 1500mm or so. These remained securely fixed when subjected to light hand pressure at the time of inspection.

We found no staining to the rainwater goods at the gutter joints, or the connections of the gutters and downpipes.

As part of an ongoing maintenance commitment on the part of the homeowner, it is strongly recommended that the rainwater goods are the subject of an annual inspection every autumn after the leaves have dropped. Any leaves or other debris that has accumulated should be removed, and the gutters checked to ensure that they remain in free flowing, watertight condition.

The rainwater downpipes discharge via a series of gullies, which have been provided with debris traps. The gullies provide a means of accessing the underground drains to facilitate rodding, which is an effective maintenance requirement to clear any debris or sediment that may periodically accumulate.

C5.4 Main Walls

As advised in the introduction to this report, the main external walls appear from measurement and observation, and from the drawings provided by Crest Nicholson to be of cavity masonry construction. From review of drawing *14672 – HGP – DOR – A – 1002 REV C2* we can confirm the inner leaf of the external walls is formed from 100mm masonry blockwork.

Within the loft, the gable wall panels are timber framed; believed to be spandrel panels mounted on top of masonry walls. Furthermore, an external inspection of the walls found weep holes located over openings only.

The external walls are predominantly finished in facing brickwork at ground floor level whilst the first floor is rendered.

The external walls feature stone cill detailing to all windows. Above the ground floor level windows, soldier course brickwork detailing has been incorporated. As previously reported in Section C1 of this report, engineered vertical movement joints have been introduced to the masonry walls and render finishes in positions presumably determined by the structural engineer. These are finished with colour matched mastic sealant.

Weep hole units (plastic) feature to the external walls in the following locations: -

- Above window and door openings
- Above the meter boxes at ground floor level

The walls have been constructed to incorporate a plastic style damp proof course. In this regard, we draw your attention to our commentary under sections C3, D3.1 and D3.2 of this report which specifically relate to the raising of ground levels around the buildings (house and garage).

Whilst the primary DPC is set below the 150mm standard stated within the NHBC Standards 2023, a secondary stepped DPC has been incorporated above with a clearance of approximately 225mm around the perimeter of the property.

In walls of cavity construction, the two skins of the wall are connected at intervals with metal wall ties. We have not conducted an inspection within the cavity, and are therefore unable to confirm the presence, adequacy in number or condition of these wall ties; nor of the presence of any waste material which may block or obstruct the cavity.

During our inspection, we assessed the external walls for their compliance with the NHBC Standards and can report the following:

Brickwork – Perp Joint 'Drift'

Areas of brickwork perp 'drift' has been assessed and is limited to the ground floor portioned of walls only.

The NHBC Standards makes provision for the appearance of masonry and sets tolerances in Chapter 6.1 and 9.1 respectively.

In Chapter 6.1 - External Walls, under section 6.1.11 – Construction of Masonry Walls there are guidelines for the finished appearance of masonry walls which state:

When setting out masonry:

- *avoid cutting bricks or blocks, except when it is essential*
- *avoid irregular or broken bonds, particularly at openings*
- *fair faced masonry bricks should be set out dry, prior to commencement of works.*
- *All work should be reasonably level and true, and the bond detailed in the design used*
- *perpendicular joints kept in line and plumb*
- *courses kept level by using lines and spirit levels*
- *meet the tolerances defined within chapter 9.1*

The standards and tolerances of appearance and finish are the primary concern in this instance, and as such we refer to Section 9.1.2 which states:

"External walls shall have an acceptable finished appearance. Issues to be taken into account include: a) fairfaced masonry b) render c) curtain walling d) rainscreen cladding e) brick slip cladding f) timber cladding g) tile hanging h) cast stone elements.

Tolerances and appearance should be considered:

- *for the entire wall (e.g. panels and interfaces), and not for the individual elements of the construction, such as individual bricks, individual bed joints, or design features and details (e.g. quoins, soldier courses and plinths)*
- *in daylight, and from a minimum distance of 10m.*

Fairfaced masonry should:

- *be reasonably uniform in texture, finish and colour, including mortar*
- *not have excessive colour banding*
- *not have significant cracks in the facing bricks or other damage, such as chips and marks greater than 15mm in diameter.*

Where a fairfaced finish can only be achieved on one side (such as half brick walls), the other faces should be left neat and tidy. Also note:

- *Some mortar blemishes will occur on individual masonry units.*
- *Some variation will occur in the texture, finish and colour of mortar, in individual masonry units and generally over the wall.*
- *Efflorescence occurs naturally in some types of masonry. It is not harmful and generally disappears over time.*
- *Some brick products have features or marks which may be in excess of 15mm in diameter*
- *Some minor shrinkage cracking may occur between masonry units (bricks and blocks) and mortar joints.*

Thereafter, the Standards go further into specific provision for fairfaced masonry in section 9.1.2.2, which states construction tolerances in respect of perpend joints as follows:-

"Perpend joints should not cumulatively displace in the same direction for more than 5 joints. The centre line of any perpend joint should generally be within ±15mm of the centre line of the next 5 successive perpend joints. Also note, to achieve setting out, perp joints in masonry panels between openings may be offset with the perp joints in the panels above and below. The joints within the panel should not cumulatively displace.

From inspection of the ground floor facing brickwork, no significant areas of perp drift have been identified. Whilst minor differences of circa 3mm – 5mm were observed, this is well within tolerance.

On this basis, it is reasonable to conclude that the brickwork has been gauged / laid correctly as determined by the NHBC Standards, and that no remedial work is required to the property.

<u>Vertical Alignment – Corners of the property</u>

These corners of the building were observed from ground level and found to be noticeably true / plumb in the vertical plane at the time of inspection. However, due to access limitations, the measurement protocol set out in the NHBC Standards could not be followed but we are of the opinion that should it be tested / checked it would reveal compliance with the standards set out in the NHBC Standard.

As mentioned above, in Chapter 6.1 - External Walls, under section 6.1.11 – Construction of Masonry Walls there are guidelines for the finished appearance of masonry walls. In this regard, the key points to observe are:

When setting out masonry:

- *All work should be reasonably level and true, and the bond detailed in the design used*
- *meet the tolerances defined within chapter 9.1*

In Section 9.1.2.2 of the NHBC Standards, the tolerances for appearance and finish are stated:-

Fairfaced masonry should meet the following tolerances:

- *adequately straight on plan, with a ±8mm maximum deviation in any length of wall up to 5m*
- *adequately straight in section, with a tolerance of ±8mm per storey height (up to 3m)*
- *a maximum of 8mm from plumb in any storey up to 3m. Taller walls should be a maximum of 8mm from plumb per storey and 12mm in total*
- *a maximum deviation of 4mm over 1m at external reveals.*

Whilst Trinity Rose could not readily undertake an measured assessment of the walls via the testing methods stated within the NHBC Standards, there were no obvious areas of non-compliance noted. Whilst photogrammetry assessment is an option, we do not consider this to be a requirement.

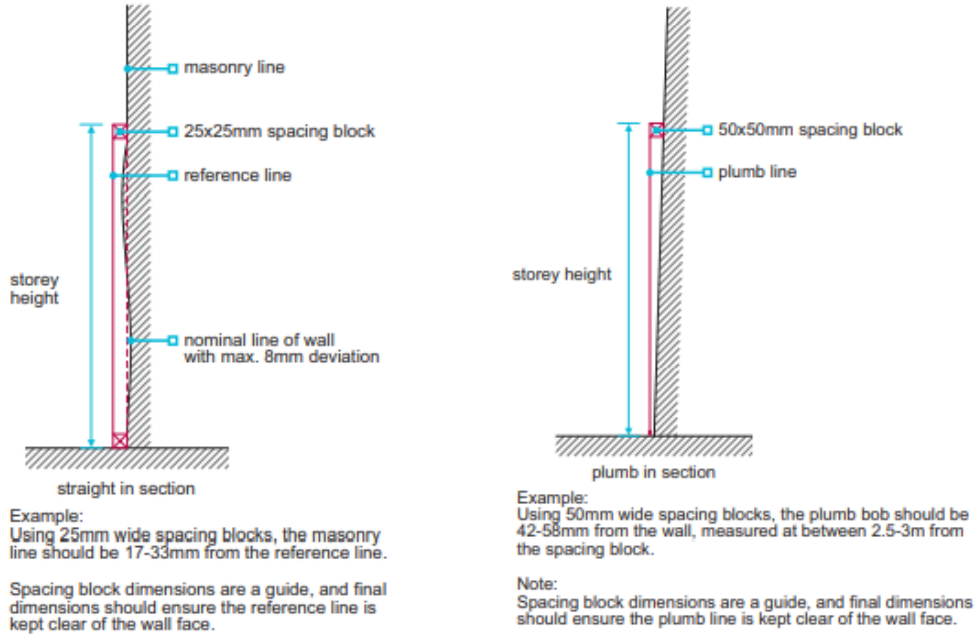

Source: NHBC Standards 2023 © NHBC

Pointing Quality

The general quality of finish to the exposed brickwork elevations is good with no areas of missing mortar identified. Pointing has been finished in a 'bucket handle' style, recommended within the NHBC Standards under Section 6.1.14. 'Snots' / mortar drops have been cleaned off the face of the bricks generally with only minor blemishes seen on inspection.

To reiterate, standards of appearance and finish are covered in Section 9.1.2 of the NHBC Standards, which we set out under the sub-heading "Brickwork – Perp Joint Drift' above.

Our inspection considers the appearance of entire walls, rather than isolated areas and shows consistency in appearance when viewed in daylight and from a minimum distance of 10m.

Rendering

Guidance provided by the NHBC simply states under Section 6.1.15 "*The surface to which render is applied, shall be appropriately constructed and satisfactorily resist the passage of moisture. Walls to be rendered should be constructed in accordance with the relevant parts of this chapter. For detailed guidance on 'Render', see Chapter 6.11.*"

Further guidance is provided under Section 9.1.2.2 which goes on to say:

"*Render should:*

- *be reasonably consistent in texture, finish and colour*
- *be flat, within a maximum ±4mm vertical and horizontal deviation in 5m*
- *be free from crazing (a set of hairline cracks, generally less than 1mm in depth and no more than 0.2mm wide)."*

"*Also note:*

- *there may be some colour variation in appearance due to differences in suction of the background and orientation of the wall*
- *daywork joints, patching and other repairs may be visible but should not be unduly obtrusive*
- *some localised hairline cracking is likely to occur in both traditional render and proprietary render systems. Such cracking and crazing should not impair the performance of the home*
- *areas of render in close proximity to features (e.g., bell casts) are excluded from the tolerance*
- *flatness is measured in a similar way to straightness and plumb of masonry."*

From our observations, we have not identified any areas of the rendering which would justify remedial works to bring this element in line with the NHBC Standards. Some markings

and scuffs were noted and would be classed as a snagging matter rather than a technical issue.

We do stress that due to the height of the rendering; Trinity Rose has been unable to undertake tests in accordance with the NHBC Standards. Despite this, no visible evidence of defect was noted to justify further investigation or testing being required.

Window Sills – Sectional Stone

The detailing to the window sills uses stone sections bedded on to the external leaf of masonry. Generally, the sills have been split in to two pieces of stone with a mortar joint between, smaller window openings utilise a single stone sill.

At each end of the sill, an upstand, incorporated in to the stone, meets the adjacent brickwork and then blends in with the coursing.

Generally, the sills appear to be satisfactory with appropriate groove ('throat') details noted to the undersides and adequately weathered / jointed to the adjoining masonry.

C5.5 External Joinery

Windows

The main windows are of smooth uPVC double glazed specification in an arrangement of mixed opening casement, and fixed panel units. The windows incorporate closeable passive ventilation slots (trickle vents).

Mastic seals provided around the perimeter of the window frames were acceptably consistent in terms of appearance and thickness.

The windows were visually inspected and operated at the time of inspection. Whilst the windows were noted to be in a working order, a number of casements do require minor post-installation easing and adjustment and cleaning, to prevent the casement twisting within its track when being opened / closed.

No evidence of failure to double glazing was identified. Some of the rubber gasket seals to double glazed panels are not perfectly aligned and others, particularly in the family bathroom had 'rolled' externally.

These matters are considered to be a snagging issues and should be addressed by the developer prior to handover of the property to the purchaser.

External Doors

The front entrance door is of composite panel type and set within a weatherstripped frame. This door was found to be in satisfactory operational condition and in good operational condition at the time of inspection.

At the rear of the property, there is a single set of French doors of uPVC framed, double glazed specification, serving the kitchen. In accordance with good practice, toughened glass has been incorporated.

The glazing of the external doors has been assessed in accordance with Section 9.1.6 of the NHBC Standard, below.

Glass shall be free from undue defects. Glass should be checked in daylight, from within the room and from a minimum distance of 2m (3m for toughened, laminated or coated glass).

The following are acceptable where they are not obtrusive or bunched:

- *bubbles or blisters*
- *hairlines or blobs*
- *fine scratches not more than 25mm long*
- *minute particles.*

The above does not apply to areas within 6mm of the edge of the pane, where minor scratching may occur.

In this regard, when viewed from 3m distance, no scratches were observed. Accordingly, we do not consider that any remedial work is required to the double-glazed panels.

Some minor scuffing was noted to the door sill externally. This should be included as part of any pre-handover snagging works to be undertaken by the developer (it is expected this would be carried out by a 'Magic Man' service).

A level threshold has been provided to the rear kitchen doors, accessing the garden. Adjacent to the door sill, a narrow slot drain has been incorporated to collect rainwater overflow from the door units and any runoff water from the patio slabs.

Section 7.1.16 – Accessible threshold and upstands state the following requirements:

"Drainage arrangements should be effective and have a suitable overflow. The building should not flood where an outlet or downpipe is blocked. This can be achieved by using:

- *at least one outlet and an overflow with at least the capacity of the outlet*

- *at least one outlet chute and hopper (Chute should be sized to serve at least twice the discharge capacities to allow for partial blockage without causing flooding into the building)*
- *at least one outlet chute and hopper (Chute should be sized to serve at least twice the discharge capacities to allow for partial blockage without causing flooding into the building)"*

From our non-intrusive inspection, it was not possible to confirm whether the above criteria have been met. Whilst there is a slot drain present, any connection into a soakaway or drain needs to be confirmed by the Developer, along with whether any overflow outlet has been provided.

RECOMMENDATION

Further clarification of the extent of the drainage system of the rear doors will need to be provided by the developer, to determine whether an adequate drainage connection and overflow system has been installed.

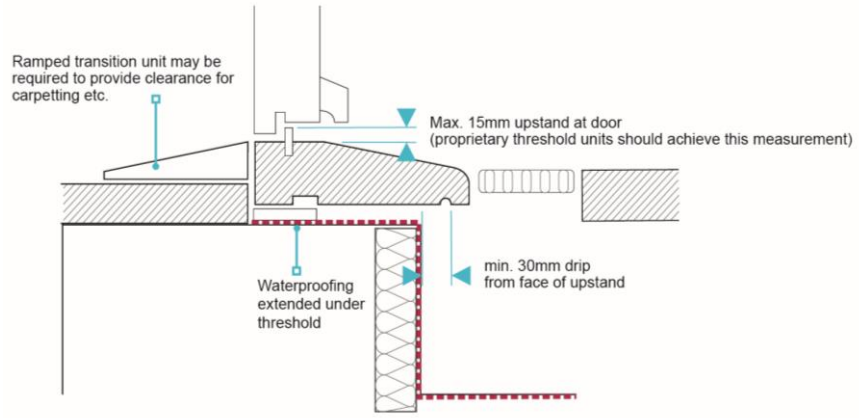

Source: NHBC Standards 2023 © NHBC

Eaves Boarding

The boarding provided around the perimeter of the roof comprises a boxed arrangement of uPVC fascia and soffit panels. These were noted to be neatly incorporated, and generally well restrained.

A number of blemishes and dirt was noted around the property generally and we would expect these to be cleaned off and included within a pre-handover developer's snagging process.

C5.6 External Decoration

Generally, the condition of the finish to the render coatings was consistent, with no areas of remedial work required.

C6 The Interior

C6.1 Roof Space

Access to the main roof void is via ceiling hatchway from the first floor. Our inspection of the roof void was limited, owing to insulation, lining felt and the inverter unit for the photovoltaic panel system that could not be readily removed.

The roof framework has been formed from evenly spaced, factory made timber truss units of pre-treated timber specification, spanning between the main loadbearing walls. These are supplemented by diagonal and lateral timber bracing at ridge and truss node points, and galvanised steel strapping between the truss units and gablet walls, which were seen to comprise factory made, timber framed and sheathed spandrel panels.

The standards for truss roof construction are set out in Section 7.2 of the NHBC Standards 2023.

From a review of Section 7.2.3 - Design of Pitched Roofs, we could determine that trusses have been spaced at approximate 600mm centres; this is normal practice but must be confirmed by the design engineer. The trusses have been fixed to the supporting walls, and remain suitably vertical in alignment. Where multiple trussed rafters have been used, they appear to have been fixed together in accordance with the NHBC Standards. Where the dormer projections have been formed, a series of diminishing trusses to the secondary roof slopes have been incorporated. On this basis, the general design requirements of Section 7.2.3 appear to have been met.

The standards of bracing for truss rafter roofs are determined in Section 7.2.9 of the NHBC Standards 2023. From this, it can be determined that the property generally satisfies the qualifying criteria of Table 4 for the use of standard trussed rafter bracing; namely the property:-

- *has a rectangular roof (including hip ends) and is either a duo-pitched or a mono-pitch structure*
- *is not taller than 8.4m (to the underside of the ceiling tie)*
- *does not have trusses which span more than 12m*
- *has trusses which are only supported at each end*
- *does not have unsupported masonry spanning more than 9m (between buttressing walls, piers or chimneys)*
- *Is braced according to the conditions of the site and in accordance with the design*

- *has a ceiling of plasterboard directly under each truss.*

It should be appreciated that we have not been provided with detailed drawings or engineered designs for the roof frameworks, which may contain specific provisions for bracing. As such we have based our assessment on the general provisions of the NHBC Standards, from which we could determine that truss bracing has been completed using a minimum timber size of 100mm x 25mm and where each bracing timber has been nailed to each rafter it crosses. Laps to the bracing timbers are across two trusses.

As the roof has not been underlaid with sarking boards, diagonal and longitudinal bracing has been provided at rafter level. Longitudinal bracing members extend the full length of the roof, tightly abut gablet and party walls and permit diagonal bracing to pass. The bracing meets the minimum requirement for four diagonal rafter braces, laid at approximately 45° to the rafters on plan.

On this basis, we consider the truss frameworks to be correctly installed and braced, in accordance with the current NHBC Standards.

The roof truss frameworks and gablet spandrel panels have been well formed, cut and jointed together. No significant deflection or distortion was identified to the principal framing members. This indicates that the timbers are of adequate design to be dealing with the loads imposed upon them.

The roof frameworks have been overlaid with a modern breathable lining felt which sits directly beneath the external tiled covering. This was seen to be in consistent alignment and with joints correctly arranged and of adequate overlap.

Where the roof slopes run perpendicular to each other and intersect, diagonal valley gutter arrangements have been formed with ply layboards laid over the top of trusses. From an inspection and moisture meter tests taken within the roof void, no evidence of water penetration was observed. This indicates that the valley gutter arrangements are currently performing effectively.

Insulation material of approximate 350mm thickness has been incorporated between the trusses at joist level.

Upon opening up of the loft hatch, a number of flies were noted to fall from the loft. This could be an indication of a failure to provide adequate preventative measures at the time of construction. These need to be cleared and further investigation undertaken to ensure that any means of insects gaining access to the roof void are closed off.

Within the loft area, a soil pipe was identified, set adjacent to the east elevation, with no air admittance valve (AAV) or connection to a tile vent. In order to prevent debris entering the system and sewer smells entering the loft space, this will need to have a finished connection prior to hand over.

RECOMMENDATION

1. **The Developer shall ensure that any gap of 4mm or more will be sealed to prevent insect and vermin ingress to the roof void.**

2. **Connection of the soil and vent pipe to a tile vent/ AAV needs to be undertaken.**

C6.2 Ceilings

Ceilings within the property are of sheet plasterboard construction, with skim coat plaster finishes prevailing.

The NHBC Standards for ceiling finishes are set out in Section 9.1.3 – Ceilings. The standards to be achieved are:

Ceilings should be:

- *level within a 3mm deviation per 1m for ceilings up to 6m across (measured at the furthest points across the full width of the ceiling)*
- *a maximum of 20mm out of level for ceilings over 6m across*
- *flat within a ±5mm deviation, measured using a 2m straight edge with equal offsets.*

Within these standards, the ceiling boards were noted to be in generally consistent and acceptable alignment. However, some cosmetic blemishes were identified, such as light hairline cracking which typically follows margins of rooms or along board joint lines, together with some popping of the plaster finishes above nail fixings.

A full pre-handover snagging inspection is yet to be carried out; therefore, these issues are deemed to be resolved at a later date once the inspection has been completed. Such cracking can be addressed through the use of fine filler and redecoration to a consistent finish and appearance.

Particular attention was paid to the condition of the ceilings beneath the first-floor bathroom areas. From visual inspection and tests with a moisture meter, no adverse readings were obtained. On this basis, there is no evidence of water leakage from the upper floor sanitaryware or concealed pipework affecting the ground floor ceilings.

RECOMMENDATION

The Developer shall allow for a full pre-handover snagging survey to be carried out by a third party to identify cosmetic blemishes, which should be rectified and de-snagged prior to handover.

C6.3 Floors

The ground floor to the property is of suspended concrete construction with mixed finishes. As detailed in section C3 of this report, the sub-floor void is adequately ventilated with cross-ventilation from air bricks in the north-east and south-west elevations.

The ground floors were found to be firm, well set and even to the tread, with no undue ramping, hollowness, dishing or displacement identified. No cracking or adverse changes in level were identified to the floor coverings or finishes through internal door openings. Furthermore, the general condition of the installed fitted floor coverings was found to be good.

At first floor level, the floors are of suspended timber joist construction. These floors are formed from joists which rely principally on the external and internal loadbearing walls for support.

The suspended upper floors remained firm, well set, level and even to the tread where walked upon. However, it should be appreciated that at the time of inspection, the property was unoccupied and unfurnished; as such, the supporting floors have not been fully tested under normal domestic use and loading conditions.

C6.4 Internal Walls & Partitions

According to the plan 14672 – HGP – DOR – A – 1002 REV C1, internal walls and partitions are a mixture of 100mm 'Aircrete' blockwork and timber stud partitioning with acoustic insulation to walls between WC's and bedrooms. All studwork walls are faced with 12.5mm plasterboard with a skim plaster finish and a mixture of emulsion paint and applied tiled finishes.

The arrangement of partitions is such that not all of the ground and first floor walls align, and as such the dividing wall between the kitchen/ dining room is detailed as an internal load bearing wall. This wall is believed to support the first floor, however, the drawing provided does not show joist directions and as such, this cannot be confirmed.

There is, however, no evidence to suggest that the imposed load of the partitions is adversely affecting the upper floors, whereby it appears that reasonable provision has been made within the structural design of the property for this arrangement.

Our inspection of the internal wall finishes included an assessment of alignment in the vertical plane, an assessment of squareness of partition junctions, and the consistency of surface finishes. We undertook a detailed review of internal partitions, the inner faces of external walls and the internal reveals / surrounds of the external windows and doors.

Measurement was carried out using a laser level which projected in the vertical and horizontal planes, as well as right-angled metal set squares of varying sizes, and a tape measure. We take this opportunity to provide a review of each aspect of our assessment, below.

Internal Partitions

The standards of finish and tolerances for the construction of internal walls and partitions are set out in Section 9.1.3 - Internal Walls and Ceilings – of the NHBC Standards 2023.

Under this section of the standards, consideration is given to plastering and dry lining and skirtings of internal walls. The standards state:-

Plastered and dry lined surfaces should:

- *not have board joints readily visible and be within a maximum ±3mm deviation, measured using a 450mm straight edge with equal offsets*
- *be viewed from a distance of 2m in natural daylight with no artificial light shining on the surface. Wall lights and/or uplighters should be switched off*

Walls should:

- *be reasonably uniform, although there may be minor textural differences around lights and other fittings*
- *have no visible gaps between fittings and the surface (e.g. around switch plates)*
- *have jointing tape fully covered and unobtrusive in the finished surface*
- *have flat walls and within a ±3mm deviation measured using a 2m straight edge with equal offsets*
- *be a maximum of 8mm from plumb for walls up to 3m high. Taller walls should be a maximum of 8mm from plumb per storey and 12mm in total*

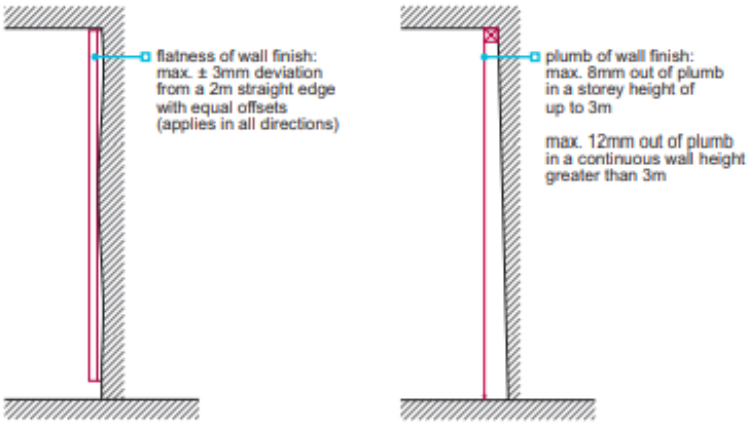

Source: NHBC Standards 2023 © NHBC

Our internal inspection was undertaken in natural daylight with lights switched off, on a clear day but without excessive sunshine. Walls were inspected from a distance of 2m.

From our visual and measured assessment of the verticality of internal walls, none of the partition walls exceed 3m in height. On this basis, the relevant tolerance to be applied is no more than +/- 8mm in the vertical plane.

All partitions were found to be within this tolerance, where measurements were taken at the time of our inspection with the exception of boxings, covered within appendix A.

Similarly, plaster finishes to internal partitions, where randomly checked, were found to be within the tolerance of 3mm (vertically and horizontally). However, deviations from the Standard tolerances were recorded around window and door openings, which we review in greater detail below.

Squareness of Corners – Internal Walls and Partitions

Measurements were taken of internal corners to partition walls within the property to determine the squareness of wall junctions.

The NHBC Standards 2023, under Section 9.1.3, makes provision and sets tolerances for the setting out of corners, which state: -

Setting out of corners, duct casings, access covers and any associated framing should be:

- *square*
- *neat and tidy*
- *provided with an appropriate decorative finish*

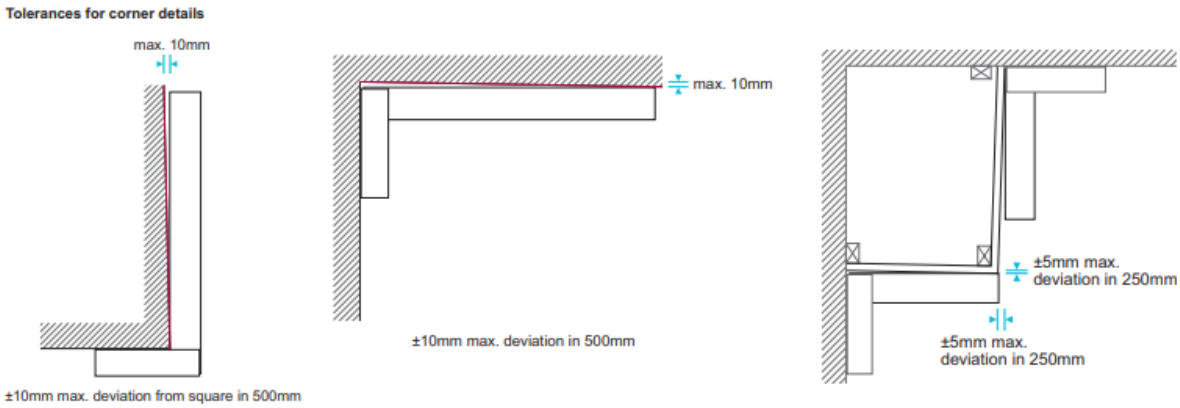

Source: NHBC Standards 2023 © NHBC

Throughout the majority of the property, the partition wall junctions met the tolerance of squareness, of +/- 10mm measured over a distance of 500mm. However, boxing arrangements to soil and vent pipes were found to be out of square, noticeably to the naked eye, we also undertook measurements to determine how far out of square the boxing is, noted in the appendix A.

Internal walls and partitions (non-loadbearing) are covered within the NHBC Standards as the following:

- *"Be adequately supported*
- *not be supported by a floating floor which incorporates a compressible layer, unless the material is specially manufactured for that purpose."*

Also note: "*Where stud partitions or proprietary plasterboard partitions are supported by a timber floor, extra noggins or joists should be specified unless it can be shown that the deck can transfer the load without undue movement.*"

As no opening up of the structure was undertaken, we cannot confirm whether these measures have been taken. However, from our visual and from use of laser measuring equipment, we did not discover any evidence to suggest that opening works are required at this stage.

Cracking to Internal Wall Surfaces

Some cosmetic blemishes were identified to wall finishes, such as light hairline cracking which typically follows margins of rooms or along board joint lines, together with cracking at the interface of skirting, architrave and the staircase strings.

In this regard, we note the provisions of the NHBC Standards 2023 in section 9.1.3 relating to internal wall finishes. The standards specifically mention the following:-

- *In plastered walls and ceilings, some tooling marks may be visible.*
- *Some cracking (up to 2mm wide) may occur at wall, floor and ceiling junctions, due to shrinkage and differential movement of materials.*
- *Small cracks may occur in wall finishes which pass across floors (e.g. in staircase walls).*
- *Where stair strings abut a wall, a crack of up to 4mm may appear as a result of shrinkage of materials*

These issues should be addressed through a full developer's snagging process to be completed prior to handover.

RECOMMENDATION

The Developer is to address the issues highlighted in Appendix A where reveals exceed the tolerances stated in the NHBC Standards.

The developer shall arrange and conclude a full snagging survey to be undertaken by a third party; address all issues arising in respect of cosmetic issues and de-snag upon completion, prior to handover.

Window and Door Reveals

A specific concern that has been raised by the homeowner is the distortion of internal plasterboard reveal linings to windows and doors. This could prevent the installation of blinds / shutters specifically designed to fit within the reveals.

On this basis, a full measured review of external window and door reveals was undertaken in consideration of the tolerances set out in the NHBC Standards 2023. The review utilised laser level equipment (vertical and horizontal) together with right-angled metal set square equipment of varying sizes, and a metal tape measure. At the time of inspection, the ambient temperature was circa 20° internally.

In this regard, the standards of finish to be achieved, together with tolerances are set out in Section 9.1.4 - Doors and Windows of the 2023 NHBC Standards, which state:

Doors and windows shall be installed to appropriate tolerances, including openings in walls and external openings viewed from the inside. Internal openings in walls should:

- *be flat along the length of sills and window boards, with a maximum deviation of ±3mm in every 2m*
- *be level within 3mm across the sill measured from the frame (tiled sills, in bathrooms, for example, may be intentionally laid sloping away from the window)*
- *have level heads and sills, a maximum of 3mm from level for openings up to 1.5m, and 5mm where longer*
- *be square with the window, with a maximum deviation of ±5mm for reveals up to 250mm deep*
- *have plumb reveals, a maximum of 3mm from plumb for openings up to 1.5m high, and 5mm where higher*

Also note: "*Window frames should not be distorted in the opening, and a maximum from plumb of 3mm when up to 1.5m in height; 5mm when larger*".

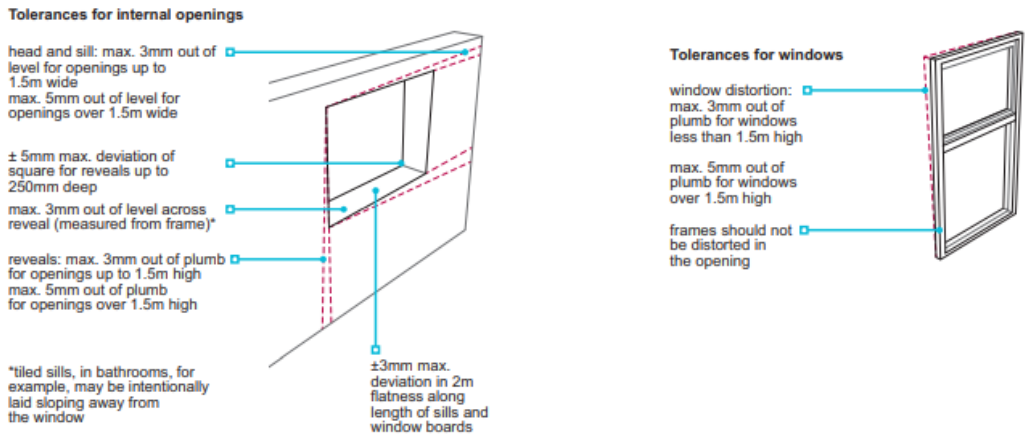

Source: NHBC Standards 2023 © NHBC

In the Appendices to this report, we set out a table that records the measurements taken around each window and door opening, highlighting those areas where the tolerances stated in the NHBC Standards have failed to be met by the Developer.

RECOMMENDATION

In areas where the stated tolerances have not been met, the Developer shall attend to remake the internal reveals to a standard that achieves compliance with the Standard tolerances, whilst maintaining the requisite standard of finish.

C6.5 Fireplaces, Flues, Chimney Breasts

Not applicable

C6.6 Internal Joinery

Internal doors are of panelled timber specification set within softwood frames. The doors were seen to operate and fit well within frameworks at the time of inspection, with no significant damage identified.

Skirtings and architraves were seen to be well secured and neatly incorporated, although your attention is drawn to commentary under section C6.4 - Internal Walls, relating to the squareness of some internal partition walls, whereby some making good will be required as a result of the failure to meet NHBC tolerances, which will also involve works to skirting boards to affected sections of the walls.

The staircase is of timber specification and features a timber balustrade arrangement to the open side of the staircase and first floor landing area.

The staircase was firm, well set and even to the tread underfoot, and with the balustrade, posts and handrails found to be adequately secured and restrained when subjected to lateral pressure. Shrinkage cracking around the stair strings is discussed in section C6.4 – Internal Walls – of this report.

Built-in cupboards provided throughout the property are of matching specification and generally considered to be fit for purpose.

Within the kitchen and utility areas, the cupboards, drawers and work surfaces were found to be in good condition.

The built-in kitchen appliances were not seen in operation or formally tested at the time of inspection, and no assurances can be offered as to their operational effectiveness or safety.

RECOMMENDATION

The Developer should attend to any minor cosmetic issues found as part of a full pre-handover snagging process, and ensure a full de-snag is concluded upon completion of works.

C6.7 Internal Decoration

The standard of finish is set out in section 9.1 of the NHBC Standards 2023, which were in force at the relevant time of construction. Under section 9.1.1 – Compliance, the Standards state:-

"Finishes shall comply with the Technical Requirements. Finishes that comply with the guidance in this chapter will generally be acceptable.

This guidance:

- *is intended to apply when the home is substantially complete and ready for NHBC pre-handover inspection*
- *will be used by NHBC both during the construction process and when conducting resolutions under section 2 of the Buildmark insurance cover*
- *should be considered in conjunction with relevant performance standards and guidance contained elsewhere within NHBC Standards*
- *uses tolerances and finishes considered to be appropriate for the house-building industry and takes precedence over other recommendations*
- *is not intended to deal with every situation which may arise, and discretion should be exercised. "*

Also note: *"Some elements may be subject to the effects of normal thermal or drying movement, and this may occur both before and after completion.*

Some materials are not uniform and are not intended to be; this includes reclaimed materials. Some colour and texture variation is inevitable; this is often used as an aesthetic feature and should be recognised in appropriate tolerances or considered separately. Acceptability of finished appearances will be in the opinion of NHBC.

The nature and extent of work necessary to remedy minor variations from the tolerances and finishes given should be proportionate and appropriate to the circumstances: for example, how readily visible or extensive the affected part of the construction is."

In this regard, decorative finishes (paintwork, tiling) are considered to be incomplete at this stage and we refer you back to previous recommendations of undertaking a full pre-handover snagging process through a third party, form which a list of cosmetic issues can

be prepared and passed to the developer to address and de-snag, prior to the final cleaning and formal handover of the property to the purchaser.

C6.8 Other

No other internal matters noted.

D. SERVICES

The main service installations within this property have been the subject of a purely visual inspection only and have not been formally traced or tested by us in any way. The information provided within this part of the report is purely for your initial advice and consideration only.

Legal enquiries must confirm that all main services have been connected to the property.

D1.1 Electricity

It is understood that the electrical installation was commissioned and subject to a full test, pursuant to the issue of an Electrical Safety Certificate upon completion of the new installation at the time of original construction.

No specific issues have been noted from a visual inspection of the main electrical intake, consumer unit, inverter unit to the PV panels and general electrical fittings throughout the property. However, no testing of the electrical installation has been undertaken.

The developer shall provide all documentation pursuant to the inspection and testing of the fixed wiring installation of the subject property, confirming the safe operational condition of the electrical system, verified by a Competent Person (NICEIC Registered Electrician) against the current Edition of the IET Wiring Regulations.

D1.2 Gas

It is understood that the gas installation was commissioned upon completion of the new installation at the time of original construction.

No specific issues noted. No smell of gas was noted at the time of inspection. However, no formal tracing or testing of the gas installation has been undertaken.

The developer shall provide all documentation pursuant to the inspection and testing of the gas installation of the subject property, verified by a Competent Person (Gas Safe Accredited Installer) against current Gas Safety Regulations.

D1.3 Water (Plumbing/Sanitary Fittings)

The incoming main supply is of a modern pipework, compliant with current water bylaws. We are unable to confirm the condition of the supply pipe from the Water Authority mains into the property.

Within the property, the plumbing pipework is of copper tubing, with PVC wastes and traps also identified. At the time of inspection, where hot and cold-water supplies and waste pipes were operated, no sign of any significant leakage was identified. It should, however, be appreciated that much of the pipework is concealed within ducts and voids.

Sanitary Fittings

Sanitaryware was noted to be of generally matching specification throughout the property, found to be well secured back to floor and wall surfaces. No sign of significant damage was identified at the time of our inspection.

However, within the family bathroom some mastic overspill was noted on to the floor coverings and should be addressed through a formal pre-handover snagging process.

Where seen, glazed screens to shower enclosures were noted to have been fitted with an appropriate form of toughened safety glazing.

Adequate water pressure was obtained from the various sanitary fittings when these were tested over a short period of time, and we therefore consider it reasonable to conclude that this system is satisfactory, although we cannot advise upon the internal condition of the service piping.

Tiling provided within the bathroom was subjected to random hand pressure. The tiles were found to be generally adequately adhered back to underlying wall surfaces. No significant impact or other surface damage was noted to individual tiles, and the grouting was found to be in generally good condition.

D1.4 Heating

It is understood that the central heating installation including boiler, pipework, heat emitting appliances and control equipment was fully commissioned and subject to a full test, pursuant to the issue of a Gas Safety Certificate upon completion of the new installation at the time of original construction.

No testing of the electrical installation has been undertaken and did not form part of our instructions.

RECOMMENDATION

The developer shall provide a copy of the Gas Safety documentation relating to the central heating boiler, verified by a Competent Person (Gas Safe Accredited Installer) against current Gas Safety Regulations.

The developer must confirm that the design of the central heating system has been carried out in compliance with its obligations, and that the boiler, controlling equipment and heat emitting appliances are of adequate capacity for the size of the property and, where relevant, individual rooms.

Hot Water

Hot water is provided via a large cylinder located within the first-floor linen cupboard, which was seen to be of modern mains pressure system, incorporating a pressure regulating vessel directly adjacent. As such, there is no requirement for a feed or expansion tank within the roof space.

As the system is of the modern unvented type and must incorporate special safety features to relieve any build-up of pressure in the system.

It is understood that the hot water installation including the cylinder, pressure control system, pumps, thermostats, pipework and controlling equipment was fully commissioned and subject to a full test upon completion of the new installation at the time of original construction.

RECOMMENDATION

The developer shall confirm that the design of the central heating system has been carried out in compliance with its obligations, and that the boiler, controlling equipment and heat emitting appliances are of adequate capacity for the size of the property and, where relevant, individual rooms.

D1.5 Other

Mains smoke detectors have been provided at each level within the property, and these should be maintained on a regular basis.

D2 Drainage

The property is understood to be connected to the mains drainage system.

It is understood that the drainage installation was inspected by the NHBC / Warranty Provider's appointed inspector during the course of construction work to determine the adequacy of falls, correct specification of inspection chambers, access points, bedding of pipework and integrity of flow of the new installation and was the subject of a final integrity test upon completion of construction.

No testing of the system has been carried out.

D3 The Site

D3.1 Garage & Outbuildings

As previously reported, the property has an attached double garage, which has been constructed with external brick facing walls, set beneath a pitched roof covered with similar tiles to the main house.

Vehicular access is via a two pressed steel up-and-over doors within metal frameworks to the front elevation.

Observations relevant to the garage include the visible fall from back to front of the garage as expected to meet current Regulations.

It is normal practice for a garage floor to be laid to fall towards the vehicular doors – a minimum 1 in 100 fall is normally specified which assists in rainwater drainage off cars to run out of the garage. This is confirmed within the NHBC Standards 2023 which states:

"*When practicable, garage floors should be laid to falls to ensure that water or spillage is directed out of the garage via the vehicle doorway.*"

Based on our visual inspection and use of levelling equipment, we are of the opinion that the garage incorporates a sufficient fall to aid the draining of water/ spillage. The access to the double garage has also been inspected and generally found to fall away from the up and over doors.

From external inspection the walls appear reasonably level and upright, free from significant distortion or fracturing of brickwork.

This notwithstanding, a DPC has been incorporated in to the external single skin wall design and was found to be set approximately 70mm from the external ground level on the east elevation. This is not in accordance with the NHBC Standards 2023, Section 10.1.5 referring to the construction of garage walls. In the Standards, it is clearly stated under the heading 'adequate resistance to rain and ground water ':-

To protect the wall from rising ground moisture, a DPC should be provided at a level at least 150mm above the level of adjacent ground. Garage walls constructed from a single leaf of masonry, such as brickwork or blockwork approximately 100mm thick, will not be impervious to wind-driven rain and consequently could become damp.

In areas of severe exposure, single leaf walls may require a high standard of workmanship and possibly surface treatment to prevent an unacceptable level of rain penetration. Where a garage is integral or attached, the design should ensure that dampness cannot enter the home.

Where a wall is below ground level, precautions should be taken to prevent the entry of ground water by:

- *tanking (see Chapter 5.4 'Waterproofing of basements and other below ground structures')*
- *the use of DPCs and DPMs*
- *drainage of ground behind the wall*

On this basis, the Developer has failed to achieve the requirements set out in Section 10.1.5 of the NHBC Standards. This issue is in isolation to the garage only, when inspecting the main house, the secondary DPC course is set 225mm above external ground level as reported under Section C3 Dampness.

RECOMMENDATION

External ground levels should be reduced to provide the minimum clearance of 150mm between the DPC and ground level stipulated in both the NHBC Standards 2023 and the Building Regulations Approved Documents.

D3.2 Grounds and Boundaries

Finished Site Levels

The property occupies a site which is essentially rectangular in its arrangement with a topography which falls from north - west to south - east (front to back).

In the course of our assessment of the main house and garage, due consideration has been given to the provision of adequate clearance to the damp proof course of the main house only.

In this regard, your attention is drawn to sections D3.1 of this report, highlighting areas where the Developer has failed to achieve a minimum 150mm clearance of the damp proof course from the garage walls to the patio/ shingled areas on the east and north elevation, required by NHBC standards Section 10.1.5 – Adequate resistance to rain and ground water.

We have had sight of topographical survey external works drawings for the development. However, the extent to which ground levels are raised around the subject property (garage) indicates that external levels have not been correctly set out around the building and which is affecting terraces, paths and level changes within the boundaries of the subject property.

Following on from above, the purchaser raised a concern that the garden topography is steeper than the gradients stated on the topographical survey. As a result, Trinity Rose has carried out a levelling survey of the rear garden and produced a sectional detail displaying our findings, found within the appendix.

To summarise these findings, the gradients calculated appear to be steeper than those marked on the topographical survey. This does not correlate with the topographical survey undertaken by Crest Nicholson pre development and as a result, we refer back to previous comments regarding the impact this has had on the setting out of the property levels, particularly the garage. However, whilst the NHBC Technical Standards provide details on areas of the garden within 20m of habitable accommodation, it provides limited information on gradients.

Under section 10.2 of the NHBC Standards 2023, relating to 'Drives, paths and landscaping' it is stated that "*formation levels should be set out in accordance with the design*".

Section 10.2.2 of the Standards covers the provision of information, in which it is stated "*designs and specifications shall be produced in a clearly understandable format, include all relevant information and be distributed to the appropriate personnel. All works relating to drives, paths and landscaping should be fully specified. Designs and specifications should be issued to site supervisors, relevant specialist subcontractors and suppliers*".

On this basis, it is reasonable to assume that a detailed design which would include slab levels of the main house and garage, together with formation / finished surface levels of external paved areas, changes in level, drainage (cover / invert levels and falls) and, where appropriate, retaining structures or key site levels would have formed part of the construction package of information. This is of particular importance given the sloping nature of the site.

Therefore, in consideration of the failure to achieve compliance with the NHBC Standards, it is reasonable to request the developer carries out a review of the design information to ascertain whether the issues relate to either (a) an incorrect design, or (b) failure of the contractor to follow the design information correctly.

RECOMMENDATION

The Developer should review design information relating to external works / site levels to determine the reason for failure to meet the NHBC Standards in respect of finished surface levels against DPC positions to the main house and garage, as set out in this report.

This should be undertaken to enable a suitable scope of remedial works, to be implemented by the Developer.

Garden finishes

Section 10.2.9 of the Standards make provision for the preparation of garden areas, ensuring that: -

- *old foundations, concrete bases and similar obstructions are removed from within 450mm of the finished ground surface*
- *appropriate action is taken to restore physical condition (e.g. soil structure) and drainage characteristics of the topsoil and subsoil that has been compacted during construction. This should include subsoil decompaction, such as rotavating, to a minimum depth of 300mm and topsoil cultivation to the full depth of compaction. Further guidance is provided in BS 3882 on the depths, handling, management and preparation of topsoil and subsoil for landscaping.*
- *ground disturbed during construction should be re-graded to conform to the general shape of the adjacent ground*
- *a minimum thickness of 100mm topsoil provided*
- *topsoil should be suitable for general landscape purposes and should also not contain contaminants which may present a hazard to the occupants*
- *topsoil that is disturbed or compacted after placement should be fully reinstated before planting, turfing or seeding. Subsoil should not be placed over topsoil. Construction rubbish and debris should be removed from the garden and other areas around the home before topsoiling, and before or after planting, turfing or seeding.*

We have not carried out soil sampling, core testing or trial holes. As such, we cannot determine whether all provisions of section 10.2.9 of the Standards have been met.

From visual inspection, the garden areas to the front of the property were being turfed over a prepared layer of new topsoil at the time of our visit. The topsoil layer appeared to meet the NHBC standards in terms of thickness.

The rear garden was turfed at the time of inspection. This turf was seen to have 'taken' and knitted well, appeared healthy and was free from weed growth. This indicates it has been well laid and maintained by the developer since it was first introduced.

E. SUMMARY & CONCLUSIONS

E1 Summary and Recommendations

In our opinion the following matters have been identified as areas where the Developer has failed to meet the requirements of the NHBC Standards 2023 at the relevant time of construction of the property.

As such, in our opinion further intervention is required on the part of the Developer, to enable and agree with the homeowner a suitable scheme of remedial works to be carried out.

- C3 – Dampness (Damp Proof Course) – external ground levels
- C6.4 - Internal Walls and Partitions (window / door openings and boxing)
- D3.1 - Garage (damp proof course - external ground levels)
- D3.2 - Grounds and Boundaries (external ground levels)

We trust that within this report we provide the advice and information you require, obviously if we can be of any further assistance, please do not hesitate to contact us.

Finally, we confirm that our report has been prepared for your initial advice and consideration. We therefore can only accept responsibility to you as our client. We cannot accept responsibility to any third party who may become acquainted with its contents without our prior knowledge or consent in writing.

G2 Signature

Signed	
Print Name	Oliver Culhane
Qualifications	BSc (Hons) MRICS – Chartered Building Surveyor
Date	23rd October 2023

APPENDIX A

Schedule of Distortions
Windows / Doors / Boxing

APPENDIX B

Existing Site Levels